ASSEMBLY INSTRUCTIONS

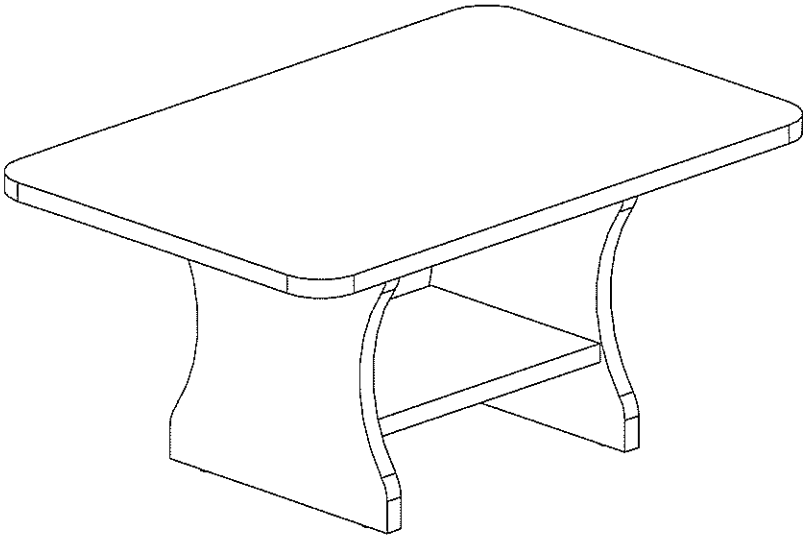

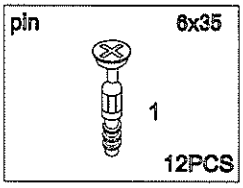

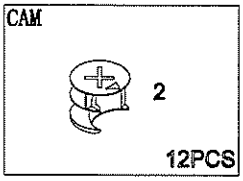

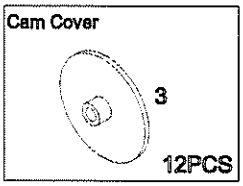

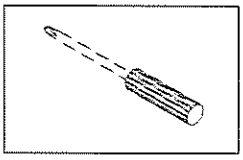

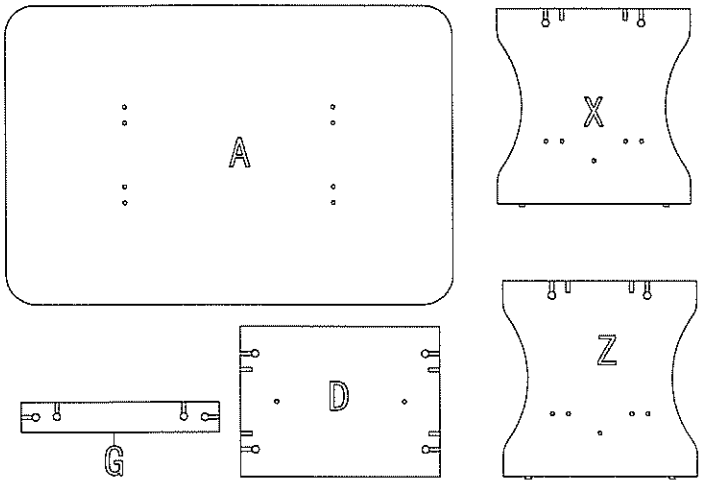

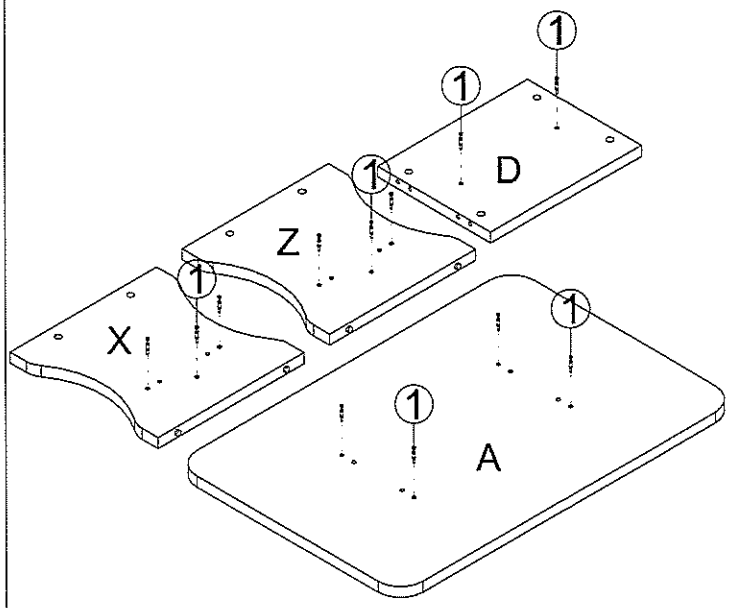

1

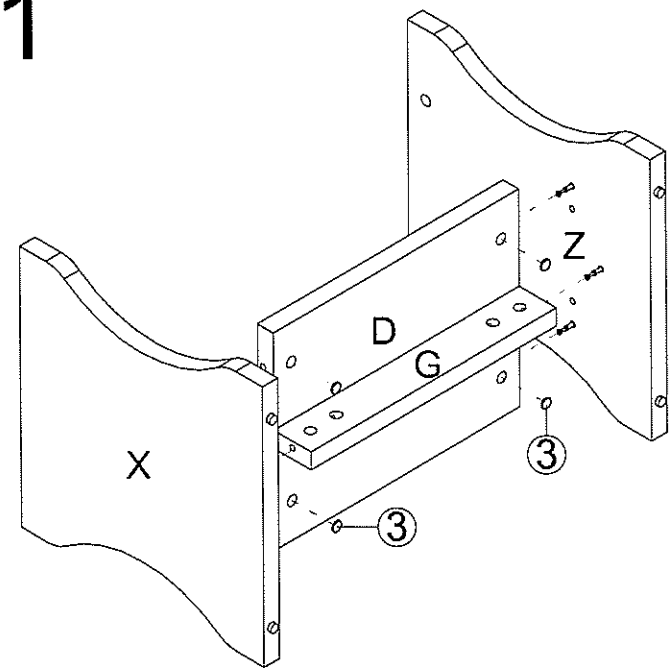
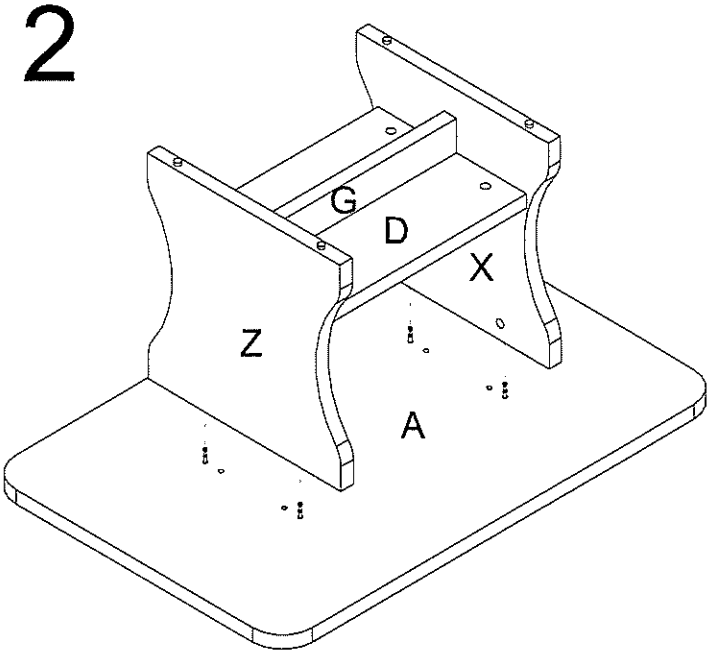
2